Our Pride…

KCP32RZ5170

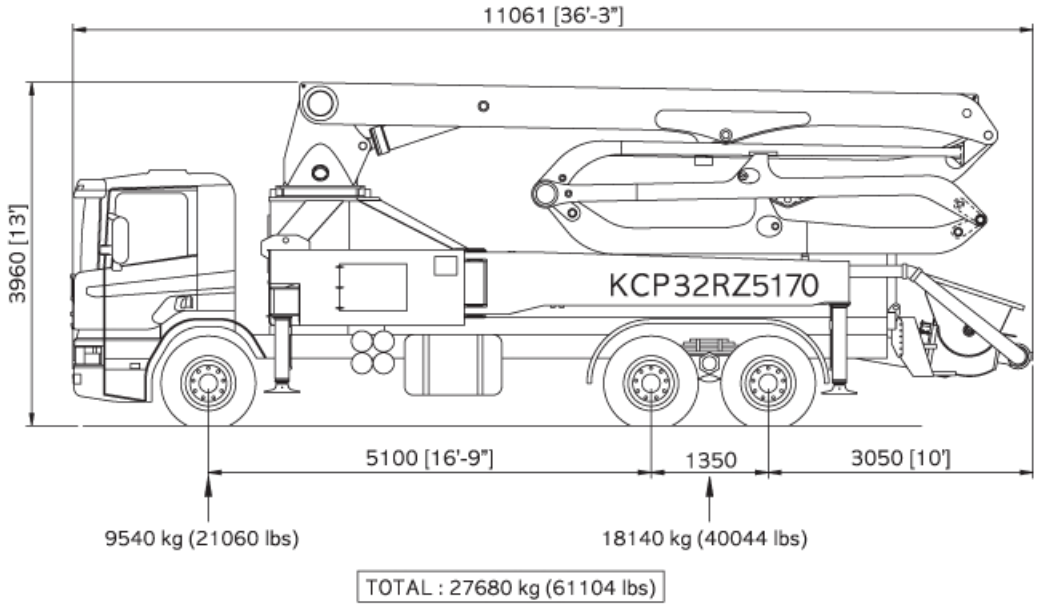

※Photos and drawings are for illustrative purpose only.
※Dimension will vary with different truck makers, models and specifications.
※Right to make technical amendments reserved.

■Boom specifications

Vertical reach	31.6 M	(103' 7")
Horizontal reach	27.7 M	(91')
Reach from front of truck	25.4 M	(83' 3")
Unfolding height	5.8 M	(19' 1")
Section articulation	90° /180° /240° /220° /220°	
Rotation	370°	
Delivery line	125 mm	(5")
Proportional boom	Yes	
End hose length	3 M	(10')
Outrigger spread-front	6.18 M	(20' 3")
Outrigger spread-rear	7.15 M	(23' 5")
Max.outrigger weight	20,500 kg	(45250 lbs)

■Pump specifications

Maximum output	170 m^3/h	(222 yd^3/h)
Concrete cylinder	Ø230×2100mm	(9"×83")
Stroke per minute	32	
Concrete pressure(rod)	72 bar	(1044 psi)
Hopper capacity	0.6 m^3	(21 ft^3)
S-tube	Ø200×Ø180	(8"×7")
Hydraulic pump	Kawasaki K3V140DT	
	(Rexroth A11VO260)	
Cycling system	Hydraulic with manual overrides	
Max. aggregate size	60 mm	(2 1/2")

※Maximum theoretical values listed.
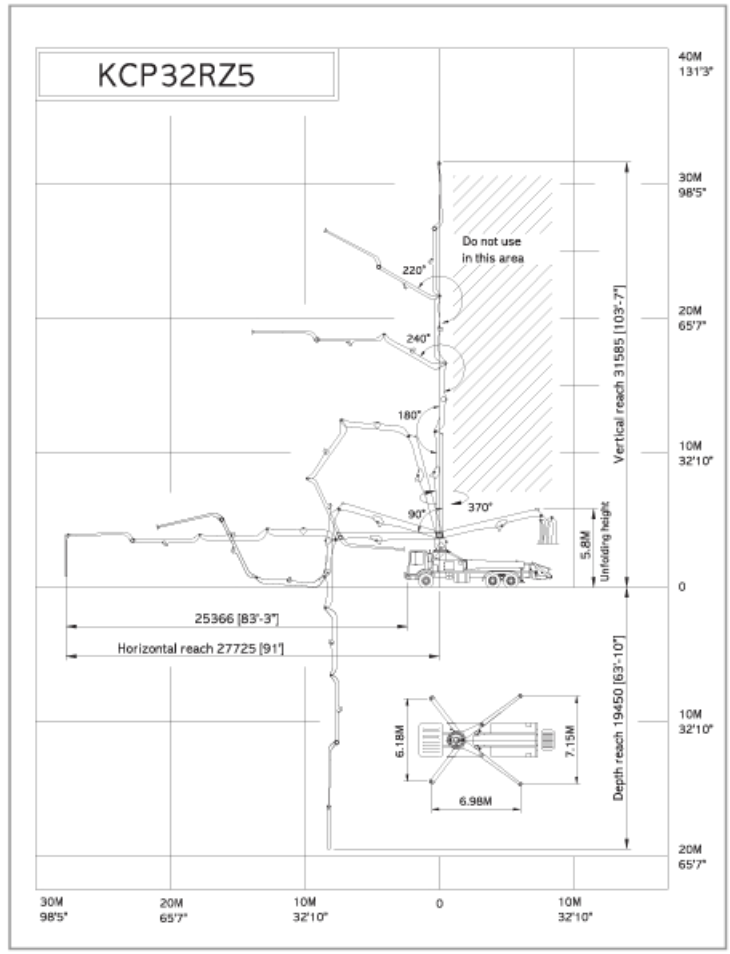
■Working diagram